SHORTENED FORK LENGTH SERIES

EPT20H-550X800 & EPT20H-550X1000

LITHIUM PALLET TRUCK

midland
pallet trucks

SMART POWERFUL DURABLE

BUILT TO WORK 24 HOURS

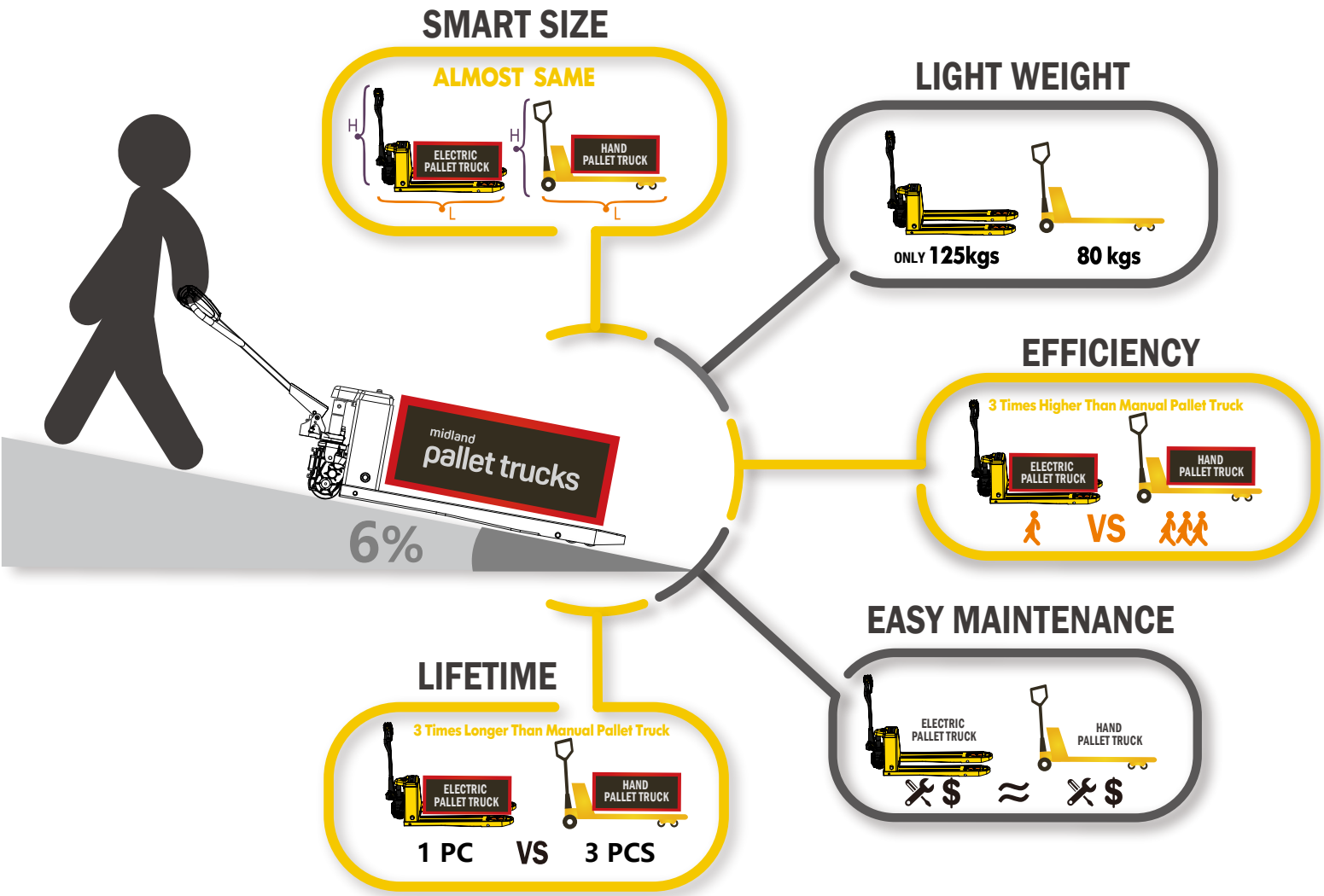

HIGH RETURN OF INVESTMENT

Safety

PRODUCTIVE

1 MONTH COST RECOVERY

Optimize your operations

SAVE LABOUR

Brake any time anywhere

Release manpower

Powerful With High Gradeability

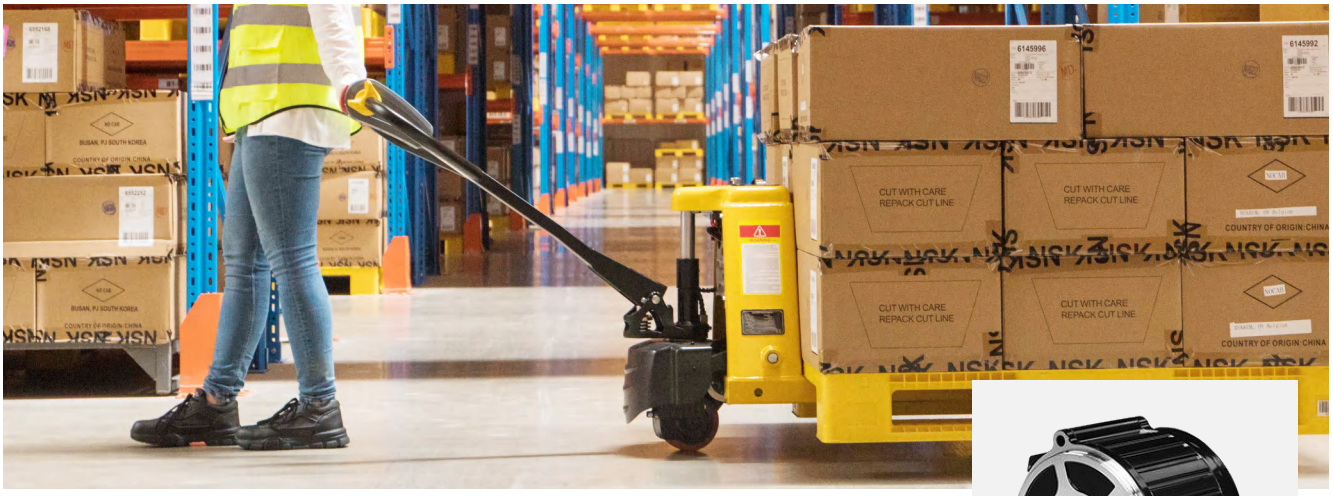

Unique brushless technology

Brushless motor, powerful and maintenance free.
Leading in the industry.

1000W power
Brushless motor
Maintenance free

Powered traveling

Powered lifting & lowering

Maintenance free

For brushed motor, carbon brush needs to be replaced every 12 or 18 months.
For EPT20H, there is no need to replace carbon brush.
Maintenance-free, saving maintenance time and cost.

Powerful with high gradeability

To easily move 1.5 ton or 2 ton over the slopes at warehouse entrances.

Traveling speed

—	**UNLADEN**	**4.5km/h**
+	**LADEN**	**4km/h**

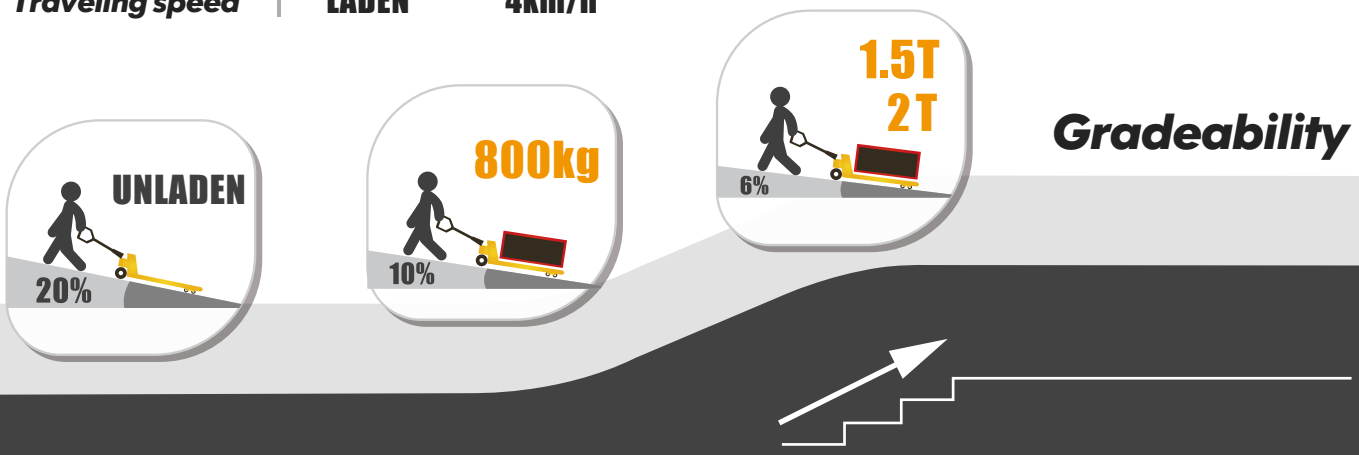

Non-stop Working

6s to replace battery

Lithium-ion

Maintenance-free lithium battery
It takes only 6s to replace battery.
With a spare battery, the unit can keep working 24 hours.

Short charging time
Charge and use freely

Quick charging: 2 hours to fully charge the battery using the optional Quick charger.

Ensured battery safety

Safe and reliable, no fire, no explosion.
Complying with IEC, UL global standard certification requirements, ensuring the safety of user property.

- Long service life: lithium battery with a long service life.
- High safety performance: it adopts soft package battery technology, built-in protection board and multiple protection to eliminate overcharge and overdischarge.
- Maintenance free: no need to add water.

Compact and durable

Solid build, no breaking

Chassis made by solid materials, no bending, no deformation.
Reinforced rocker arm, push rod, wheel frame and support seat.
No plastic part, less damage.

Most compact unit with same lifting capacity

Suitable for small workplaces such as compact workshops, trucks or vans, tail lifts or elevators.
EPT20H has the smallest turning radius among similar products.

Integral forks, no splicing

The forks are uniquely designed, easy to handle European pallets, American pallets and plastic pallets.
Solid fork with no deformation, far more durable than other brands of the same category.

Intelligent Control

When you're moving heavy loads in tight spaces, maneuverability and controllability are critical to ensure safety, productivity and comfort.

The core concept of MIDLAND products is to make your job easier. With the ergonomically designed handle, EPT20H is easy to operate, reduces fatigue and improves work efficiency.
Compared to other brands, users prefer to use MIDLAND EPT series.

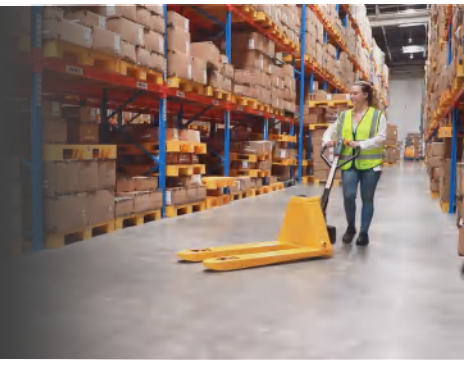

Operator Preferred

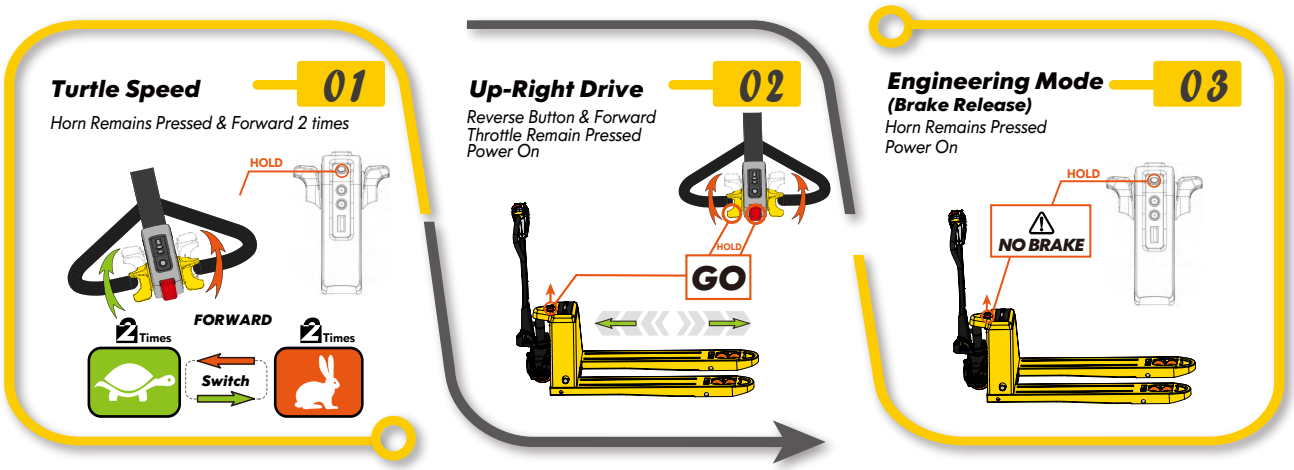

⚠ **In up-right drive mode, vehicle will move when handle is operated at any position. Please avoid misoperation.**

⚠ **Brake release mode is only for emergencies, not allowed for vehicle with normal conditions.**

Comfortable Operation
Easy to operate
Ergonomic handle, comfortable to use.

Leading Technology
CanBus technology is applied on this entry-level electric pallet truck.

Fast And Slow Speed
To match different levels of operator experience, and varied work environments.

Up-right Drive Mode
Convenient to operate in vans, on tail lifts, or inside elevators.

Engineering Mode
When the unit breaks down, it can be moved away manually.

- Recharge alert
- Hour meter
- Powered traveling
- Powered lifting & lowering
- Error code display
- Emergency stop button
- Horn

Slope anti-sliding design
Easy parking on slopes, preventing accidental backing of the machine.

Visit midlandpallettrucks.com

For more information about EPT series

Easy Maintenance

EPT series utilizes MIDLAND's integrated diagnostics, error code display and MIDLAND's original service mini-program to facilitate quick problem resolution.

Easy parts replacement

The unique design makes disassembly and assembly simple, reducing machine downtime and operating costs.

- **1 minute**
  Replace the drive wheel
- **1 minute**
  Replace the handle
- **2 minutes**
  Remove the controller
- **3 minutes**
  Remove the motor

Error Code Display
Quickly identify the fault during operation.

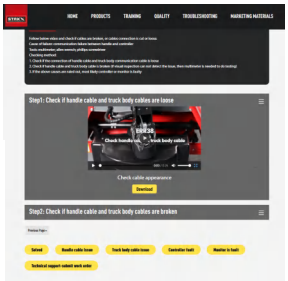

Specialized service website & mini-program
Users can identify the fault based on the online troubleshooting videos.
No limit on time, no limit on location.
Easy access to the most professional solution to all possible truck failures.

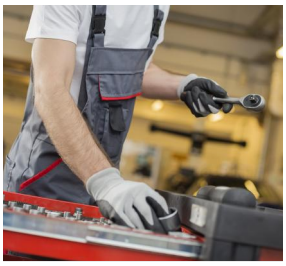

Professional after-sales support
Specialist guidance is a phone call away.

Ready to Handle Multiple Jobs

With its unique design, EPT series is powerful and maneuverable to meet the application in a wide range of working conditions.

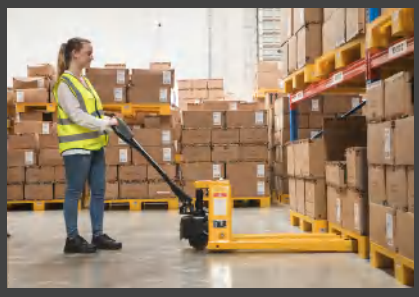

Warehouses/Logistics center

Truck tail lift

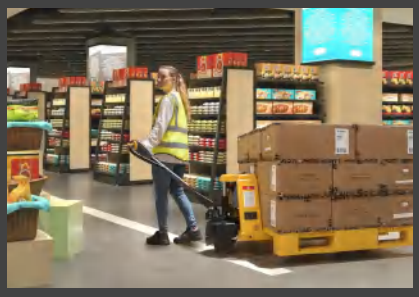

Supermarket

Pallet trucks are a necessary investment. Choosing the wrong machine could cause loss in productivity, high cost of machine downtime, unhappy workers, and overall, increased running costs.
Choosing EPT series will reward you with long-term value.

MIDLAND EPT Series

- **Powerful**
- **Durable**
- **Easy maintenance**
- **Low use cost**
- **High return on investment**

Basic Configuration

EPT20-A

Horn
Emergency reverse button
Forward/reverse butterfly switch
Lifting / Lowering
LCD Screen
- Battery indicator with hour meter
- Error code display
- Recharge alert

Multi-function Handle
(Full Electric)

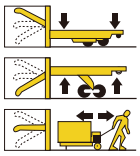

PPT20-A

Multi-function
Ergonomic Handle
(Semi-electric)

Tandem/Single PU wheel

Lithium Battery

Protection cover
Protect the drive motor,
Anti-foot stamping

Intelligent charger

EPT20

Electric lifting/lowering

PPT20-A

Manual lifting/lowering

Dimensions

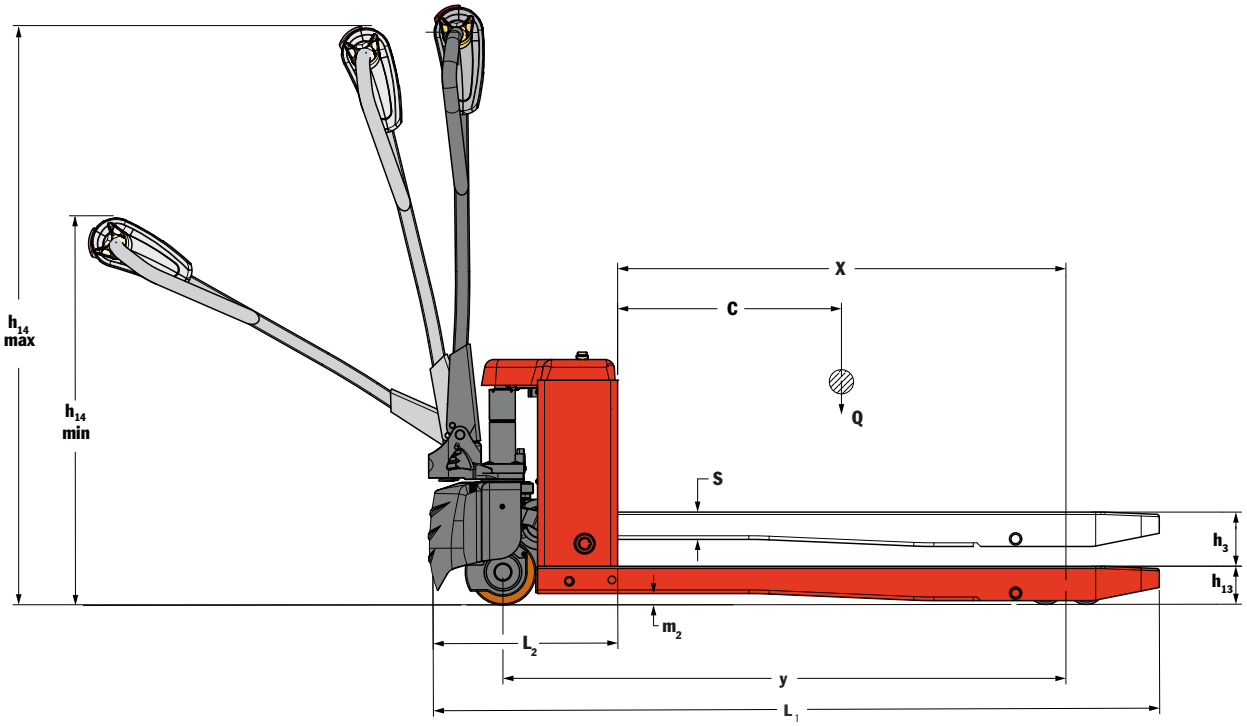
h14 max
h14 min
X
C
Q
S
h3
h13
m2
L2
y
L1

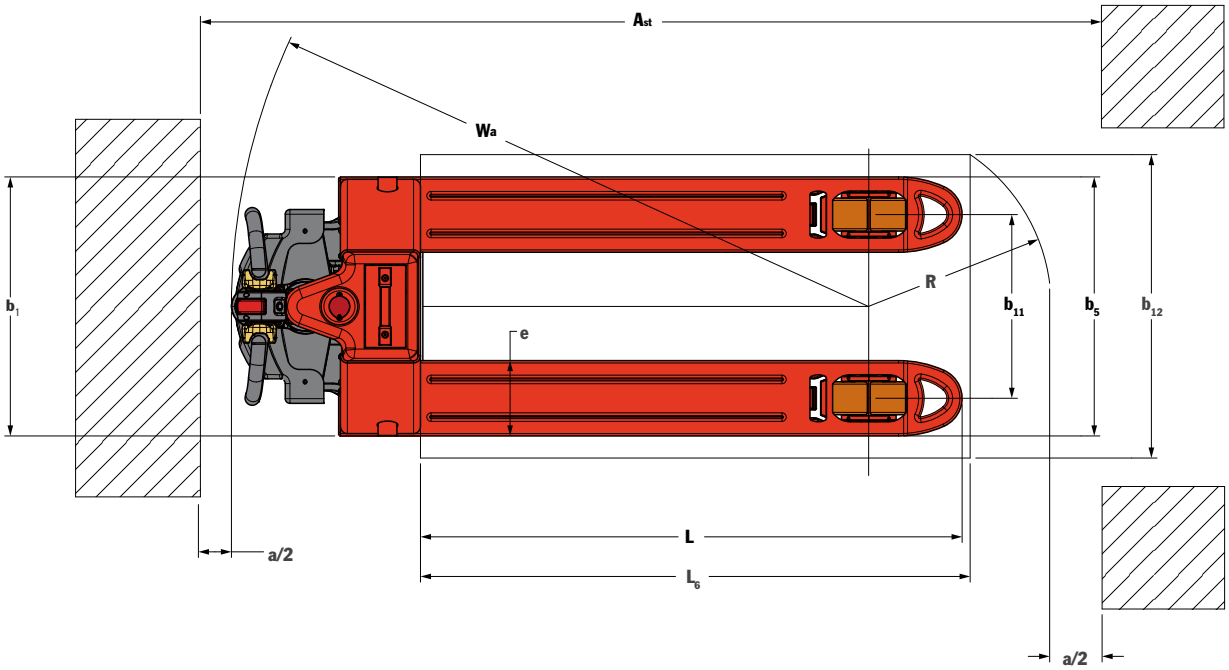
Ast
Wa
b1
R
b11
b5
b12
e
L
L6
a/2
a/2

Specifications

	MODEL		EPT20H-550X1000	EPT20H-800X1000
	CHARACTERISTICS			
1.1	Drive		Fully-Electric	
1.2	Operator type		Pedestrian	
1.3	Load capacity/rated load	Q (kg)	2000	
1.4	Load centre	C (mm)	600	
1.5	Height, fork lowered	h13 (mm)	82 ± 2	
1.6	Wheelbase	Y (mm)	1047	847
1.7	Wheel		PU (Polyurethane)	
1.8	Wheel size, front	mm	₵ 140*55	
1.9	Wheel size, rear	mm	₵ 80*70(Tandem)	
1.1	Wheels, number front/rear (x = drive wheels)		1x+2/4	
1.11	Lift	h3 (mm)	115	
1.12	Height of tiller in drive position, min./max.	h14 (mm)	735 / 1170	
1.13	Overall length	l1 (mm)	1402	1202
1.14	Fork Length	l2 (mm)	1000	800
1.15	Overall width	b1 (mm)	550	
1.16	Fork dimensions(Height*width*length)	s/e/l (mm)	58/160/1000	58/160/800
1.17	Distance between fork-arms	b5 (mm)	550	
1.18	Ground clearance, centre of wheelbase	m2 (mm)	22 / 137	
1.19	Aisle width for pallets 1000x1000/1000x800 crossways	Ast (mm)	1741	1541
1.2	Aisle width for pallets 800x1000/800x800 lengthways	Ast (mm)	1649	1449
1.21	Turning radius	Wa (mm)	1003	803
	PERFORMANCE			
2.1	Travel speed, laden/unladen	Km/h	4.0/4.5	
2.2	Lifting speed, laden/unladen	mm/s	18/23	
2.3	Lowering speed, laden/unladen	mm/s	56/46	
2.4	Max. gradeability, laden/unladen	%	6% / 20%	
2.5	Drive motor	KW	DC1.0Kw Brushless	
2.6	Lift motor	KW	DC 0.8KW	
	BATTERY			
3.1	Battery voltage/nominal capacity	V/Ah	48V / 10Ah	
3.2	Traveling brake		Regenerate	
3.3	Brake		Electromagnetic	
3.4	Sound level at the driver's ear according to EN 12053	dB (A)	＜70dB	
3.5	Service weight including battery	Kg	105	100.5

MAKE YOUR JOB EASIER!

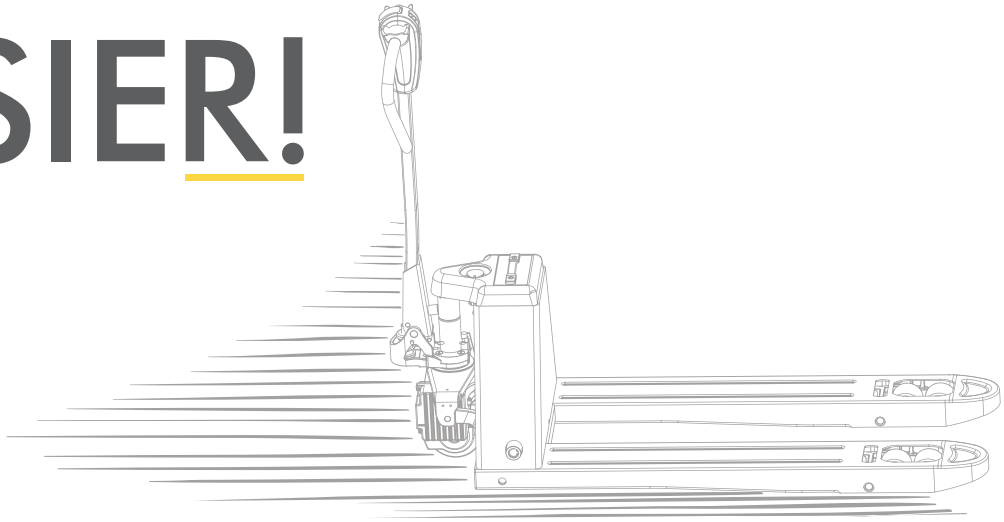

midland pallet trucks

Email: sales@midlandpallettrucks.com
Phone: 01384 841440
Web: http://www.midlandpallettrucks.com
Add: Midland Pallet Trucks, Building 33 Second Avenue, Pensnett Trading Estate, Kingswinford, DY6 7UG